OPTIMIZING TURBINE INLET CHILLING WITH THERMAL ENERGY STORAGE

TURBINE INLET COOLING ASSOCIATION turbineinletcooling.org

DN TANKS

Chilled Water Thermal Energy Storage (TES)

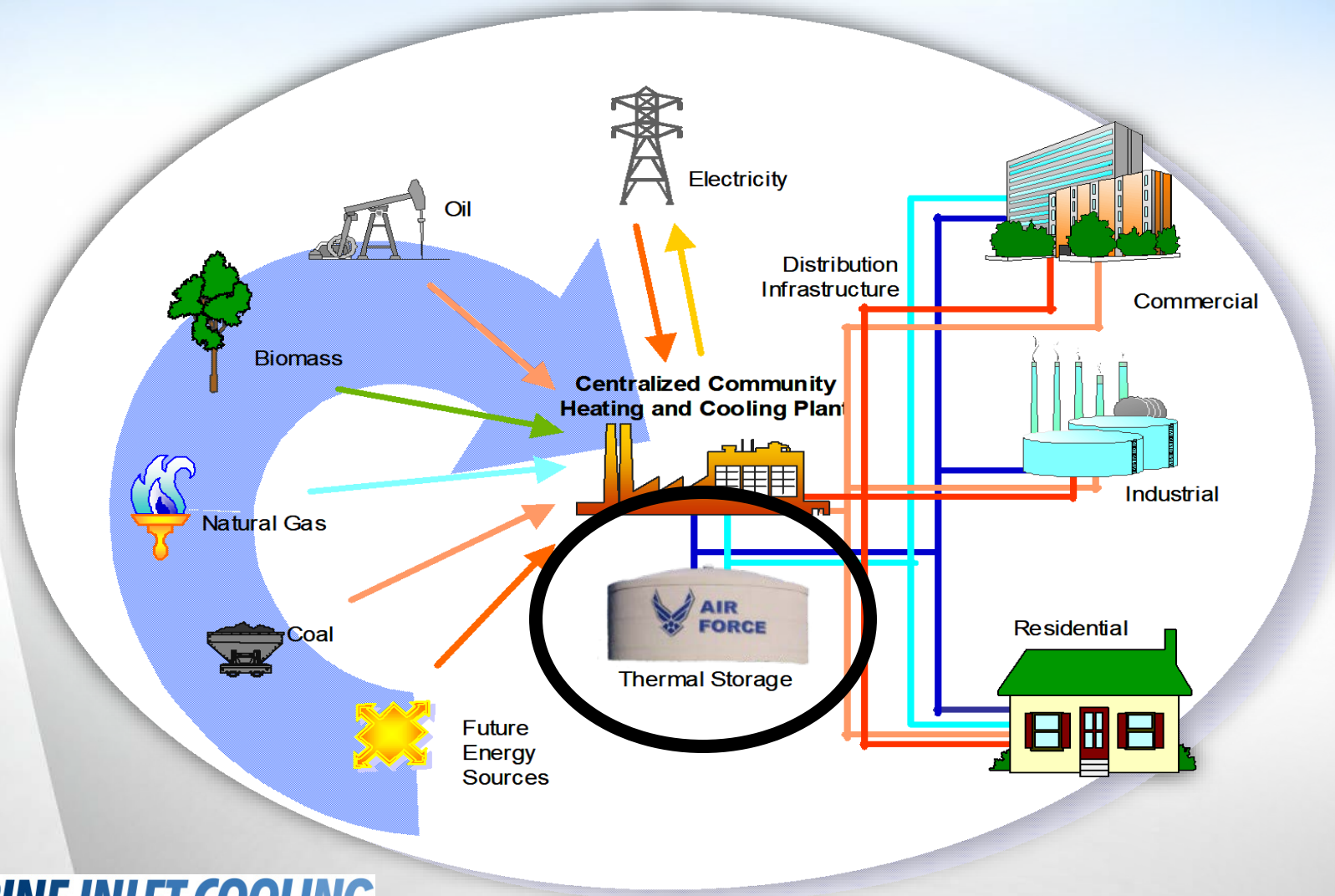

TURBINE INLET COOLING ASSOCIATION turbineinletcooling.org

TES tank is like a big battery

TES Tank Applications


Los Angeles, CA - USC


Riverside, CA - UC


Orlando, FL - UCF

College Campuses

Lackland AFB, TX


San Antonio, TX - Airport


Raleigh, NC

Government and Municipalities


Brooks, CA – CCC Resort


Santa Clara, CA – DFP


Front Royal, VA – Dominion

Private Industry, **Power Plants**, and Data Centers

TURBINE INLET COOLING ASSOCIATION turbineinletcooling.org

Natural Gas Power Plant Performance

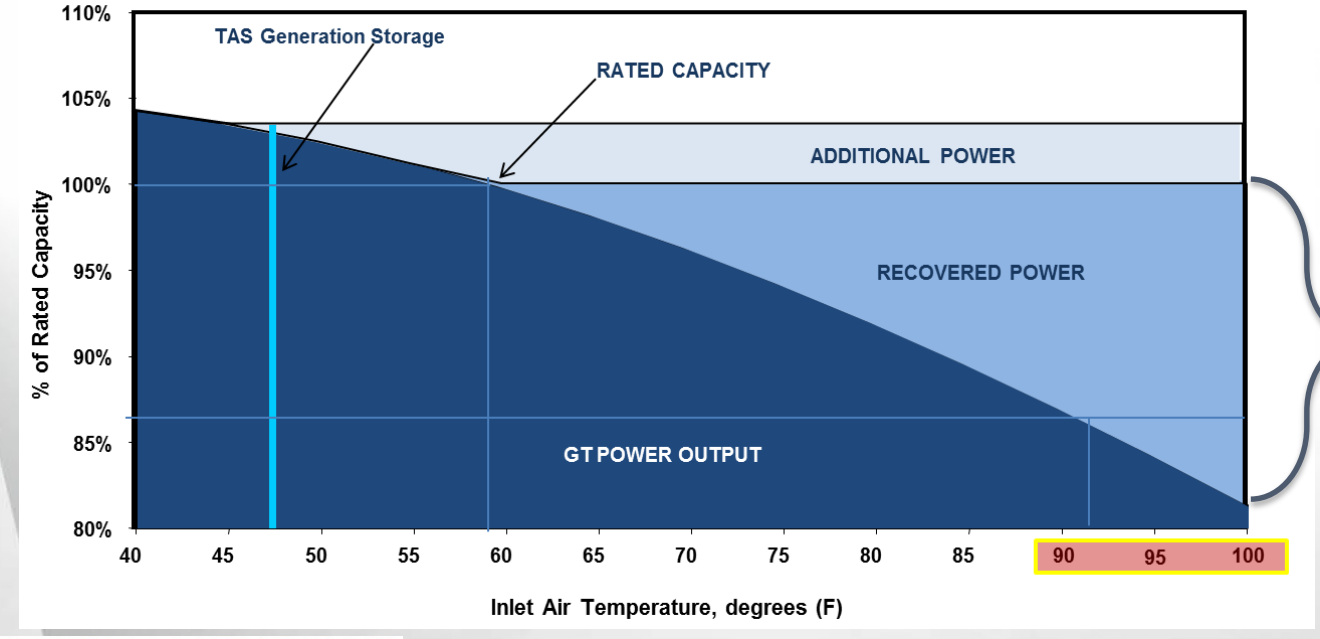

Performance goes down as outside air temp goes up

TURBINE INLET COOLING ASSOCIATION turbineinletcooling.org

Turbine Inlet Chilling (TIC)

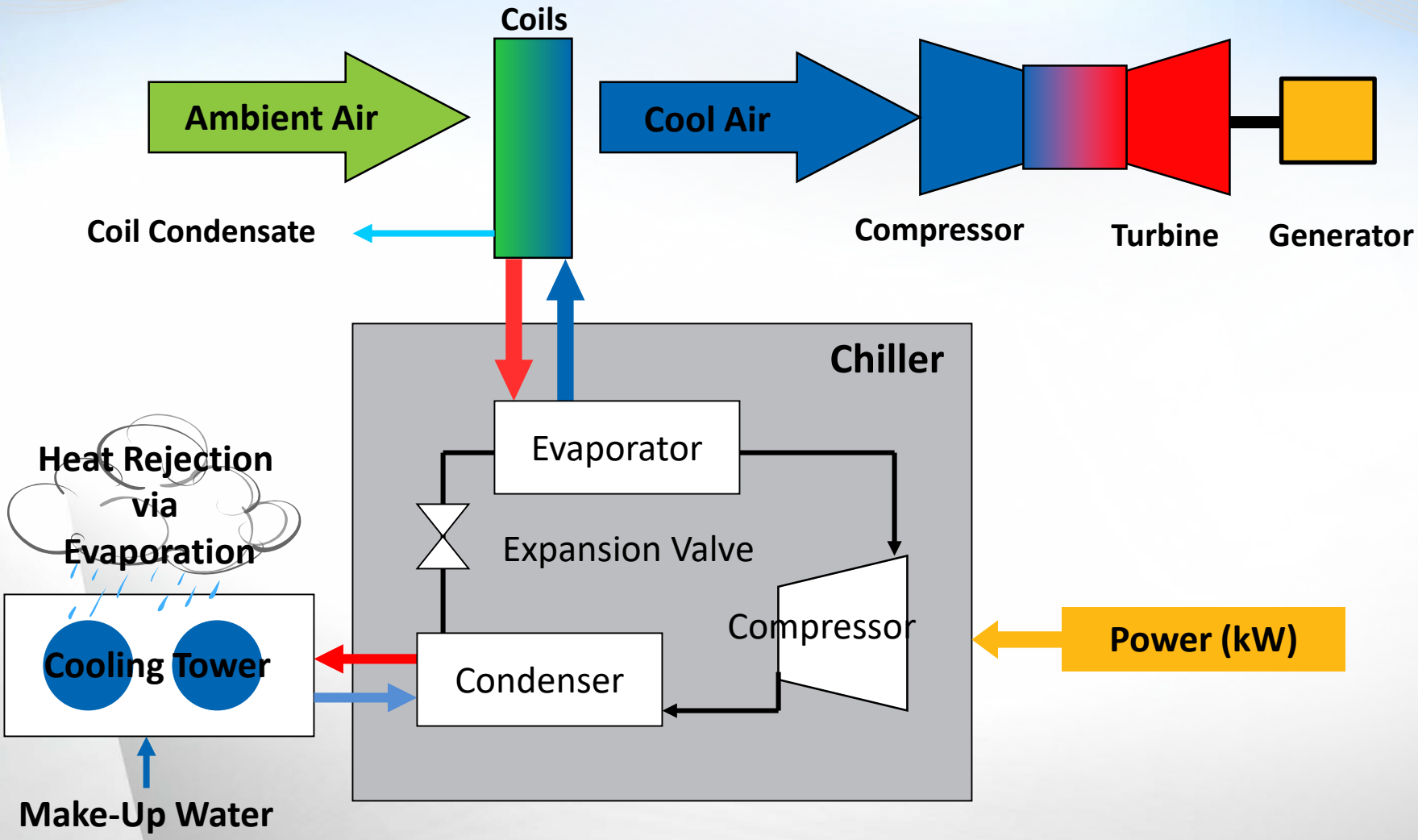

TURBINE INLET COOLING ASSOCIATION turbineinletcooling.org

Turbine Inlet Chilling System

Chiller Plant with Cooling Towers

Cooling Coil in the Inlet Air Ductwork

Turbine Inlet Chilling Improves NG Power Plant Performance

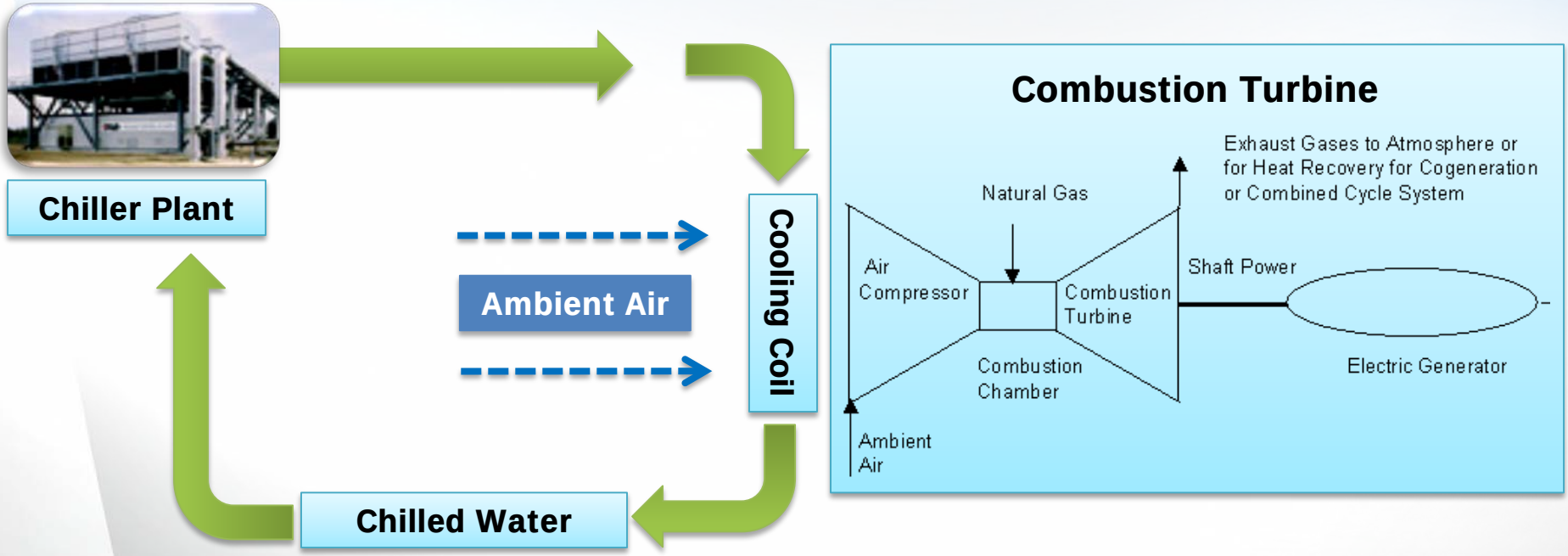

TURBINE INLET COOLING ASSOCIATION turbineinletcooling.org

Turbine Inlet Chilling Improves Gas Turbine Plant Performance

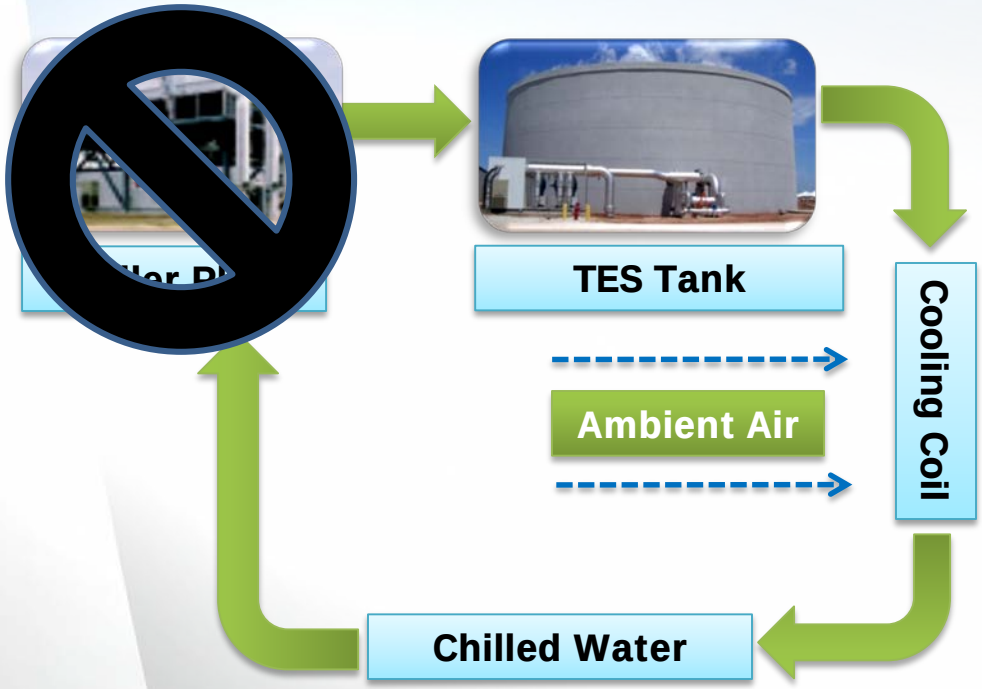

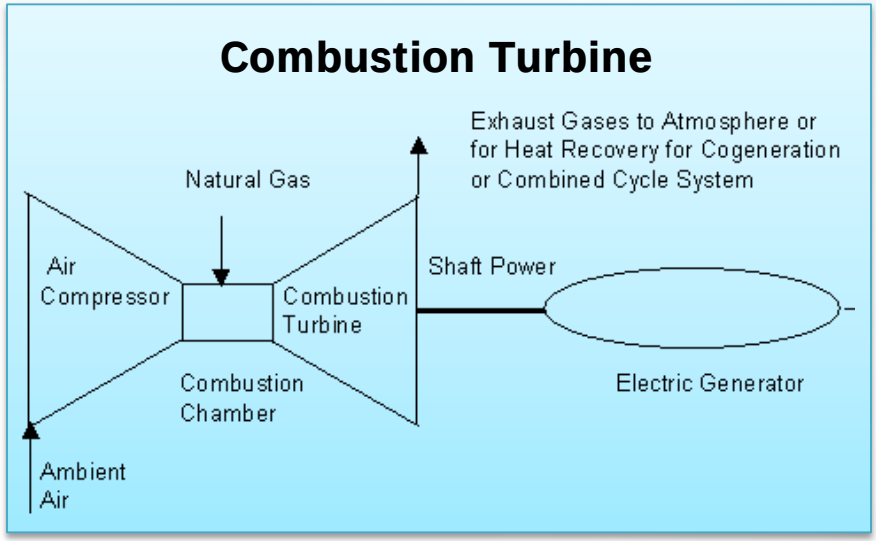

During peak periods, the chillers can be de-energized and the TES tank can provide the cooling

TURBINE INLET COOLING ASSOCIATION turbineinletcooling.org

Chilled Water TES Concept

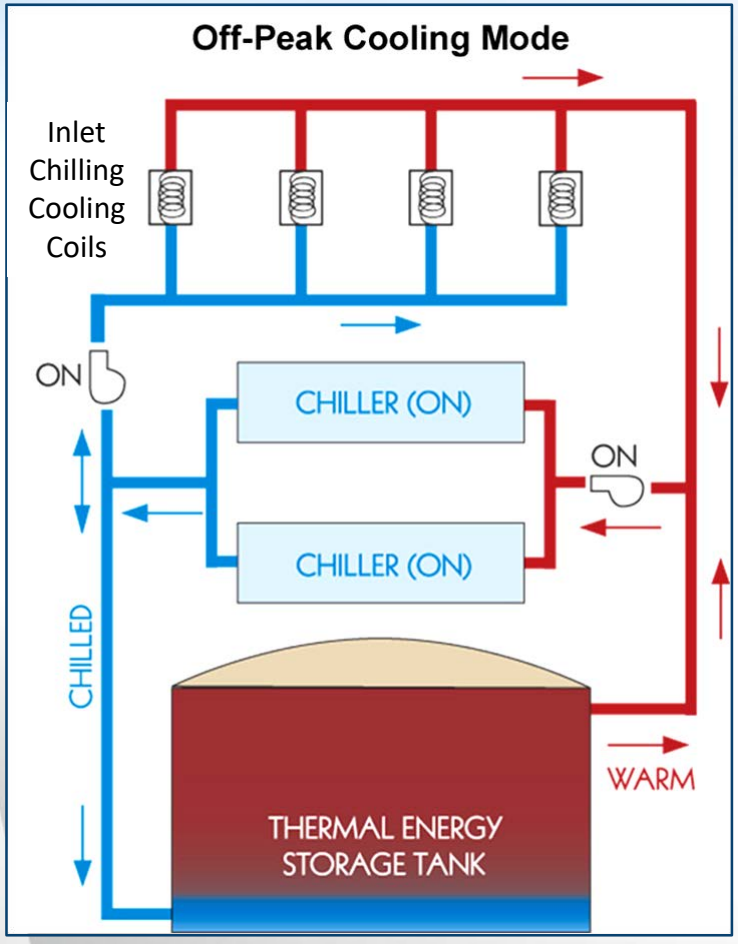

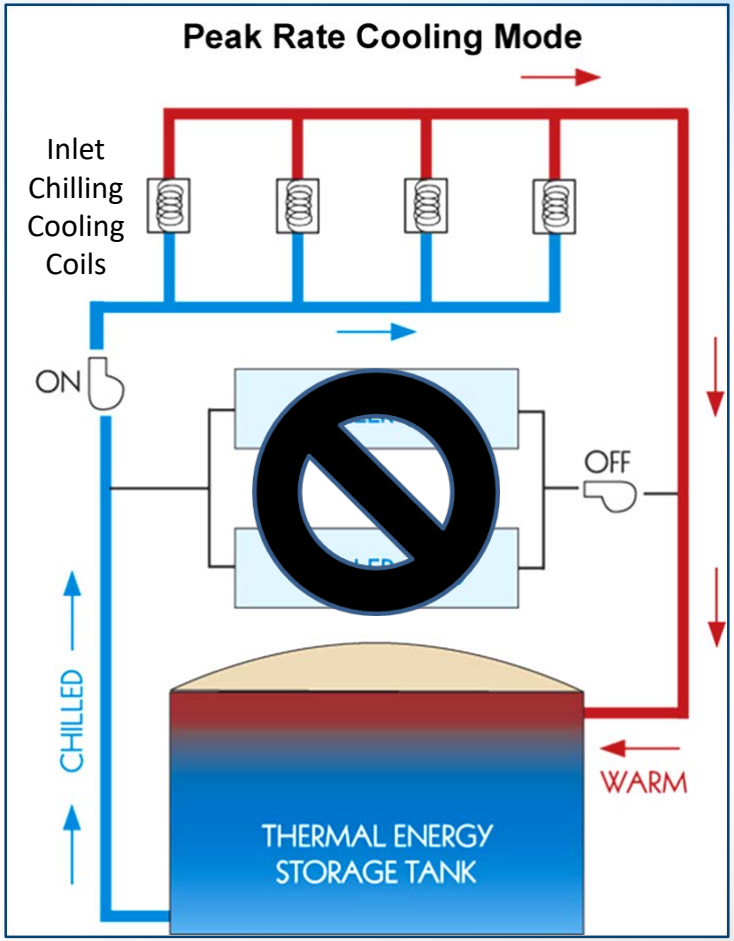

Chilled Water TES Concept

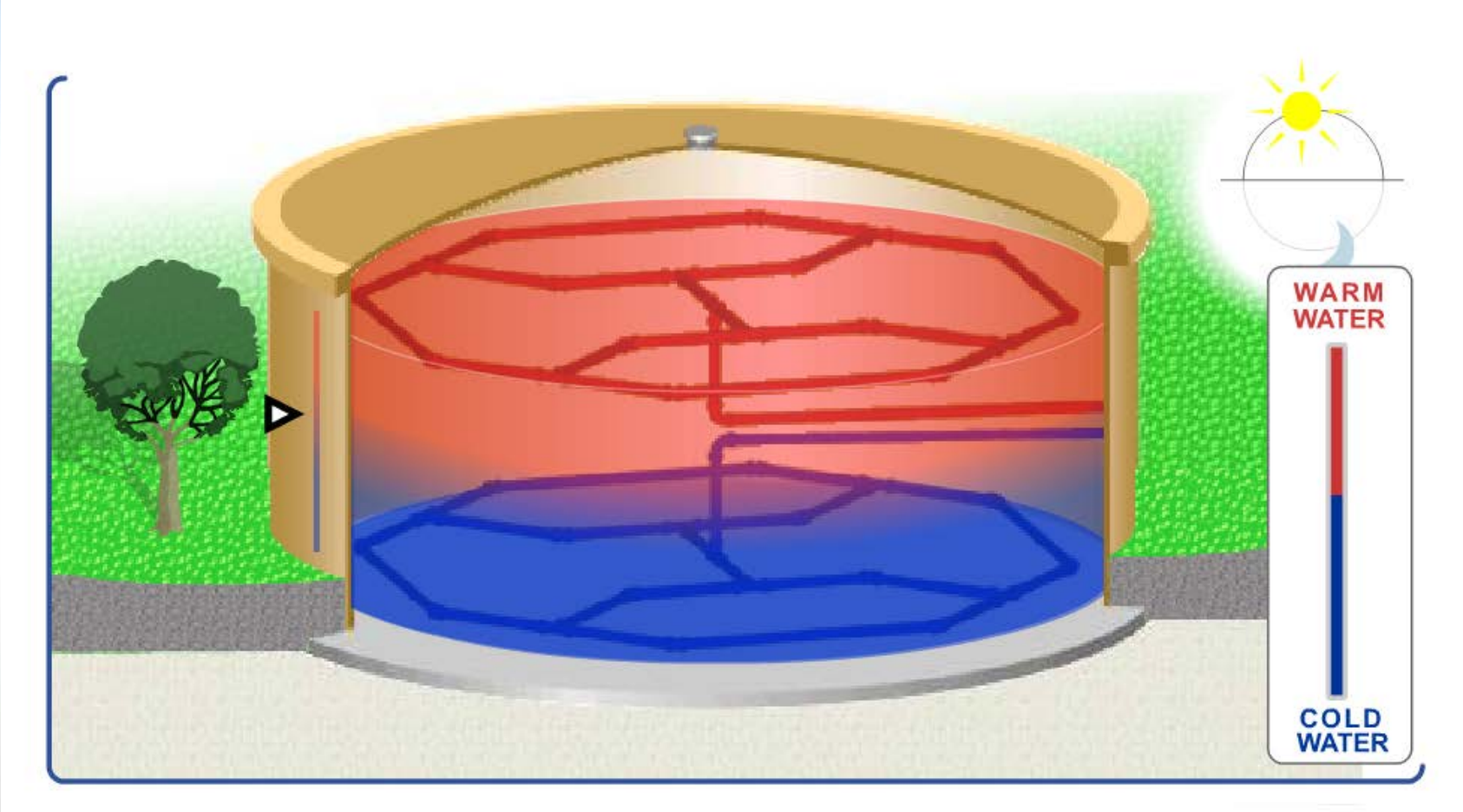

Stratified Chilled Water in a TES Tank

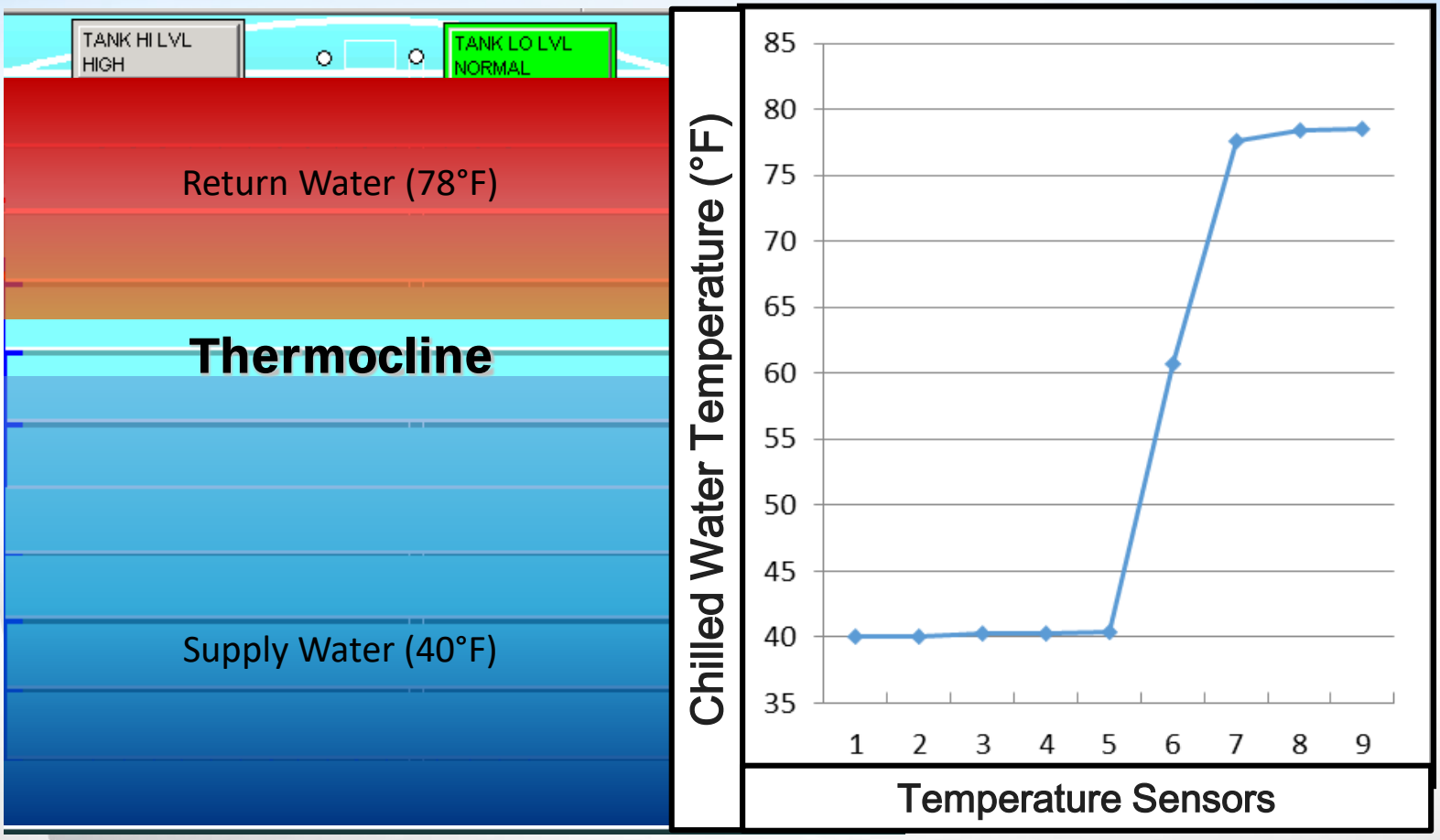

Actual Data – TES Tank at Power Plant in Baytown, TX – 08-22-15

TURBINE INLET COOLING ASSOCIATION turbineinletcooling.org

To Optimize the TES Tank Size

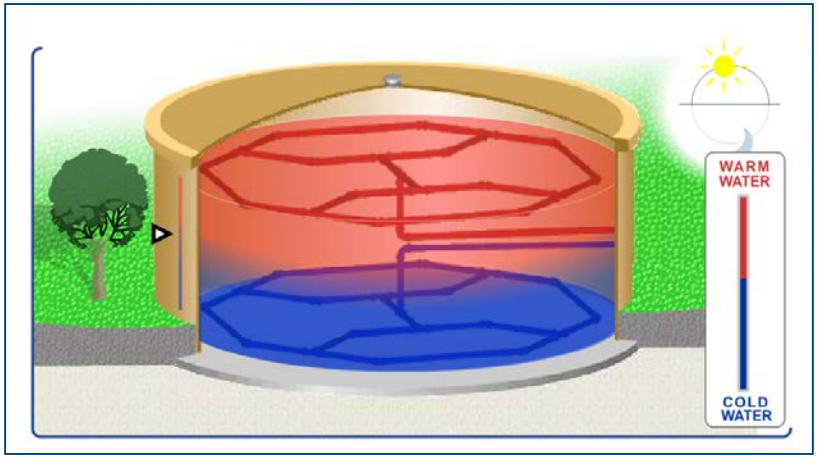

Maximize the Chilled Water ΔT to Minimize the TES Tank Volume

TES Tank Volume (Gallons)

		Chilled Water ΔT (°F)					
		10	12	14	16	18	20
TES Capacity (Ton-hrs)	5,000	800,000	667,000	572,000	500,000	445,000	400,000
	10,000	1,600,000	1,333,000	1,143,000	1,000,000	890,000	800,000
	15,000	2,400,000	2,000,000	1,715,000	1,500,000	1,333,000	1,200,000
	30,000	4,800,000	4,000,000	3,430,000	3,000,000	2,667,000	2,400,000
	50,000	8,000,000	6,670,000	5,720,000	5,000,000	4,450,000	4,000,000
	100,000	16,000,000	13,330,000	11,430,000	10,000,000	8,900,000	8,000,000

Increasing the CHW ΔT, reduces the tank size

Theoretical Performance Data

CTG Output

	95°F
Simple Cycle	MW
GE LM6000PG	39.3
Siemens SGT-800	41.4
Siemens Trent 60	48.9
GE 7FA.03	143.6

Plant Output

	95°F
Combined Cycle - 2x1	MW
GE 7FA	429.3
Siemens SGT6-5000F	598.6
MHPSA 501GAC	700.3
MHPSA 501J	844.0
GE 7H.02	855.0

Theoretical Performance Data with Turbine Inlet Chilling

CTG Output	95°F	50°F	Incremental Output - TIC	
Simple Cycle	MW	MW	MW	%
GE LM6000PG	39.3	53.2	13.9	35%
Siemens SGT-800	41.4	49.2	7.8	19%
Siemens Trent 60	48.9	61.1	12.2	25%
GE 7FA.03	143.6	165.9	22.3	16%

Plant Output	95°F	50°F	Incremental Output - TIC	
Combined Cycle - 2x1	MW	MW	MW	%
GE 7FA	429.3	483.4	54.1	13%
Siemens SGT6-5000F	598.6	660.1	61.5	10%
MHPSA 501GAC	700.3	801.4	101.1	14%
MHPSA 501J	844.0	939.1	95.1	11%
GE 7H.02	855.0	970.7	115.7	14%

Theoretical Performance Data with TIC & Thermal Energy Storage

CTG Output	95°F	50°F	Incremental Output - TIC		50°F	Incremental Output - TIC + TES	
Simple Cycle	MW	MW	MW	%	MW	MW	%
GE LM6000PG	39.3	53.2	13.9	35%	54.5	15.2	39%
Siemens SGT-800	41.4	49.2	7.8	19%	50.3	8.9	21%
Siemens Trent 60	48.9	61.1	12.2	25%	62.6	13.7	28%
GE 7FA.03	143.6	165.9	22.3	16%	169.5	25.9	18%

Plant Output	95°F	50°F	Incremental Output - TIC		50°F	Incremental Output - TIC + TES	
Combined Cycle - 2x1	MW	MW	MW	%	MW	MW	%
GE 7FA	429.3	483.4	54.1	13%	490.8	61.5	14%
Siemens SGT6-5000F	598.6	660.1	61.5	10%	670.8	72.2	12%
MHPSA 501GAC	700.3	801.4	101.1	14%	812.0	111.7	16%
MHPSA 501J	844.0	939.1	95.1	11%	949.2	105.2	12%
GE 7H.02	855.0	970.7	115.7	14%	983.8	128.8	15%

Warren County Generating Station, VA Case Study

3 x MHPSA 501GAC
3 x 7900 ton Chiller Skids
8.9M gal TES tank

TURBINE INLET COOLING ASSOCIATION turbineinletcooling.org

Warren County, VA – 23,700 tons Chilling

TURBINE INLET COOLING ASSOCIATION turbineinletcooling.org

Warren County, VA – 8.9 MG TES Tank

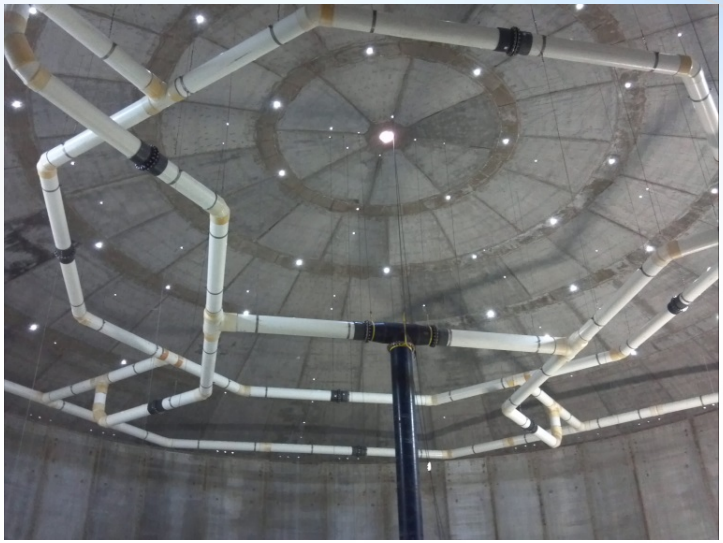

Warren County, VA
2015 Award Winning Project

POWER Engineering

Videos Webcasts Whitepapers Events Magazine Jobs

POWER-GEN

HOME ENERGY STORAGE COAL GAS RENEWABLES NUCLEAR ONSITE POWER O&M EMISSIONS BUS

31.60 +0.00 | PPL Corp +0.00 | 34.05 +0.00 | Cat +0.00 | 92.74 +0.00 | HTHIY +0.00 | 54.00 +0.00 | Exelon +0.00 | 35.49 +0.00 | Cono +0

Home » More Business Industry News » 2015 Projects of the Year Winners Revealed!

POWER ENGINEERING

2015 Projects of the Year Winners Revealed!

01/28/2016

By Sharryn Dotson, Assc
Jennifer Runyon, Chief E

Each year, power projects
Renewable Energy World
Dec. 7 at the KMA Event (

"The plant uses a thermal energy storage system and chillers … to reduce water use, store energy, and reduce its parasitic power load during peak demand. The system helps to increase power output by approximately 130 MW on a 92-degree day."

TURBINE INLET COOLING ASSOCIATION turbineinletcooling.org

Brunswick County, VA
2016 Award Winning Project

Thermal Energy Storage (TES) Tank – Turbine Inlet Cooling (TIC) System

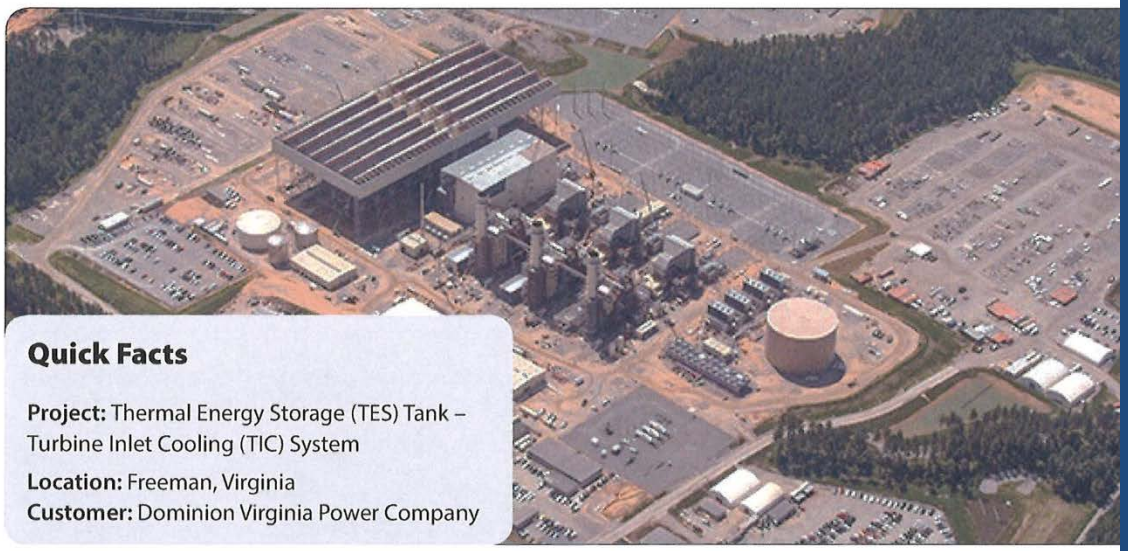

Quick Facts

Project: Thermal Energy Storage (TES) Tank – Turbine Inlet Cooling (TIC) System

Location: Freeman, Virginia

Customer: Dominion Virginia Power Company

Natural Gas-Fired Power Project of the Year and Best Overall Generation Project of the Year, Awarded by *Power Engineering* Magazine, December 2016

The Solution

Cool the CT inlet air to achieve as much as a 20 to 30 percent capacity increase and up to a 5 to 10 percent heat rate

Natural Gas-Fired Power Project of the Year and Best Overall Generation Project of the Year – Awarded by Power Engineering Magazine. The system helps to increase power output by approximately 108 MW on 92°F day.

TURBINE INLET COOLING ASSOCIATION turbineinletcooling.org

Examples of Recent Power Plants that Utilize a TIC with TES System

Application	CT No. x Type	Plant Boost	TES Tank Details Ton-hrs	Added MW's
Elec Utility - TX	1 x SW 501F	17%	28,989	2
Elec Utility - TX	4 x GE 7FA	11%	110,016	7
Elec Utility - VA	2 x GE 7FA	14%	78,710	8
Elec Utility - PA	4 x GE 7FA	13%	123,750	14
Elec Utility - VA	3x1 1,329 MW CTCC	9%	232,000	18
Elec Utility - VA	3x1 1,329 MW CTCC	9%	267,800	19
Elec Utility - VA	3x1 CTCC	10%	268,641	21
Util - Saudi Arabia	10 x GE 7EA	30%	193,000	31
Util - Saudi Arabia	40 x GE 7EA	31%	710,000	142

Several power providers have utilized TIC with TES multiple times

TURBINE INLET COOLING ASSOCIATION turbineinletcooling.org

East Coast Electric Utility

Electric utility completed multiple projects (2010-15):

- TIC with TES at 5 different power plants
- TIC with TES provided cooling for 15 CTs (5,700+ MW total)
- Total of ~1 million ton-hrs of Chilled Water TES capacity

Hot weather power enhancement (all 5 projects):

- **TIC provided ~600 MW (over 10%)** added peak power
- **TES provided ~70 MW** of load shift
- **TES provided ~600 MWh** of ES per hot day

…and TES reduced net capital cost of the overall TIC installation in addition to providing 75 MW and 600 MWh

Opportunity to Boost NG Power Plant Output throughout the U.S.

10 States with Highest MW Potential

STATE	Potential MW's From TIC - TES
TX	2,485
FL	1,286
CA	1,228
AZ	1,097
IL	1,070
GA	1,019
NC	846
LA	820
AL	770
PA	757

Estimated 30,000+ MW's of hot weather peaking potential in the US with TIC-TES

TURBINE INLET COOLING ASSOCIATION turbineinletcooling.org

Conclusions

- Turbine Inlet Chilling coupled with a Thermal Energy Storage Tank economically enhances the power output on a hot weather day
- TIC & TES are proven technologies
- There are many opportunities at new and existing Natural Gas-Fired Power Plants to enhance the power output using TIC and TES